Lab manual – LB, SG, NACL

Objective of this LAB.

This Lab Scenario would cover the topics of Load Balancing, Security Group, NACL, EBS.

Diagram

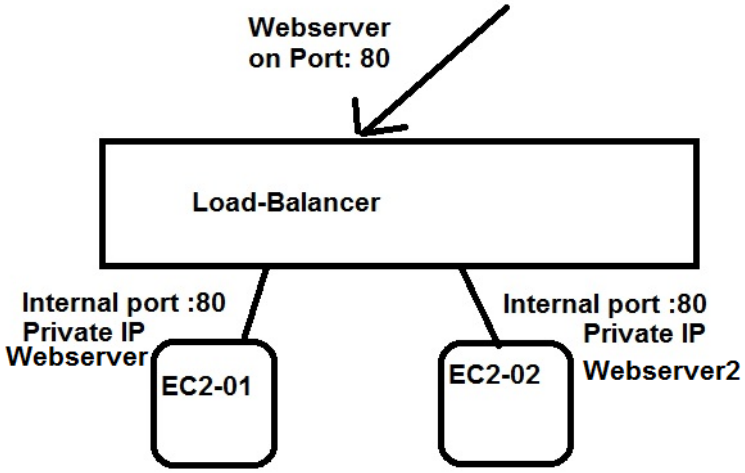

Configuration Steps.

1. Create an VPC with “2” subnets in TWO different Availability Zone.
    a. Create VPC
    b. Create 2 Subnets
    c. Create Internet Gateway
    d. Update the Routing Table.
2. Create an TWO EC2 instance with Webserver enabled.
    a. Create an Security Group with SSH and HTTP allowed
    b. Create **First** EC2 instance on **First** Subnet

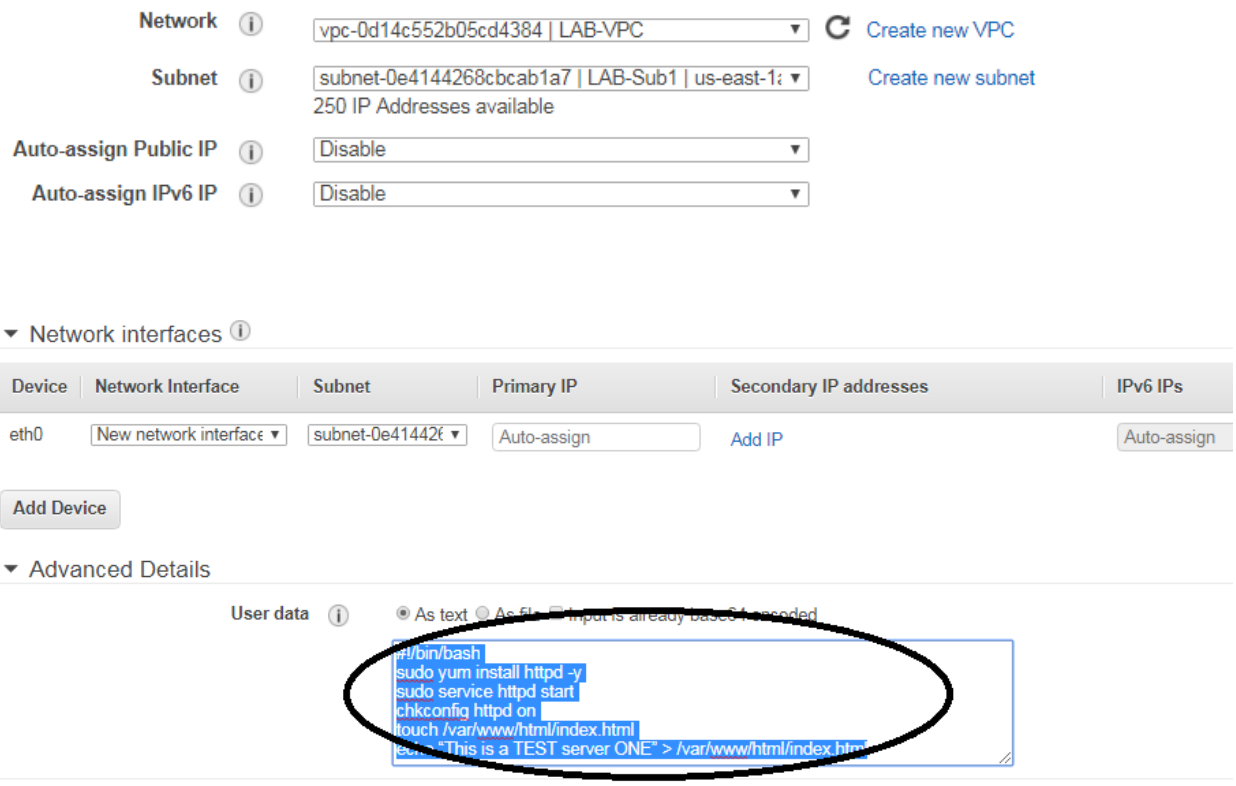

Put the below script in the “advanced Details” while creating the EC2 instance

#!/bin/bash

sudo yum install httpd -y

sudo service httpd start

chkconfig httpd on

touch /var/www/html/index.html

echo "This is a TEST server ONE" > /var/www/html/index.html

Output: -- You should be able to open the webpage and get the above message with the public ip of EC2 instance

c. Create **Second** EC2 instance on **Second** Subnet

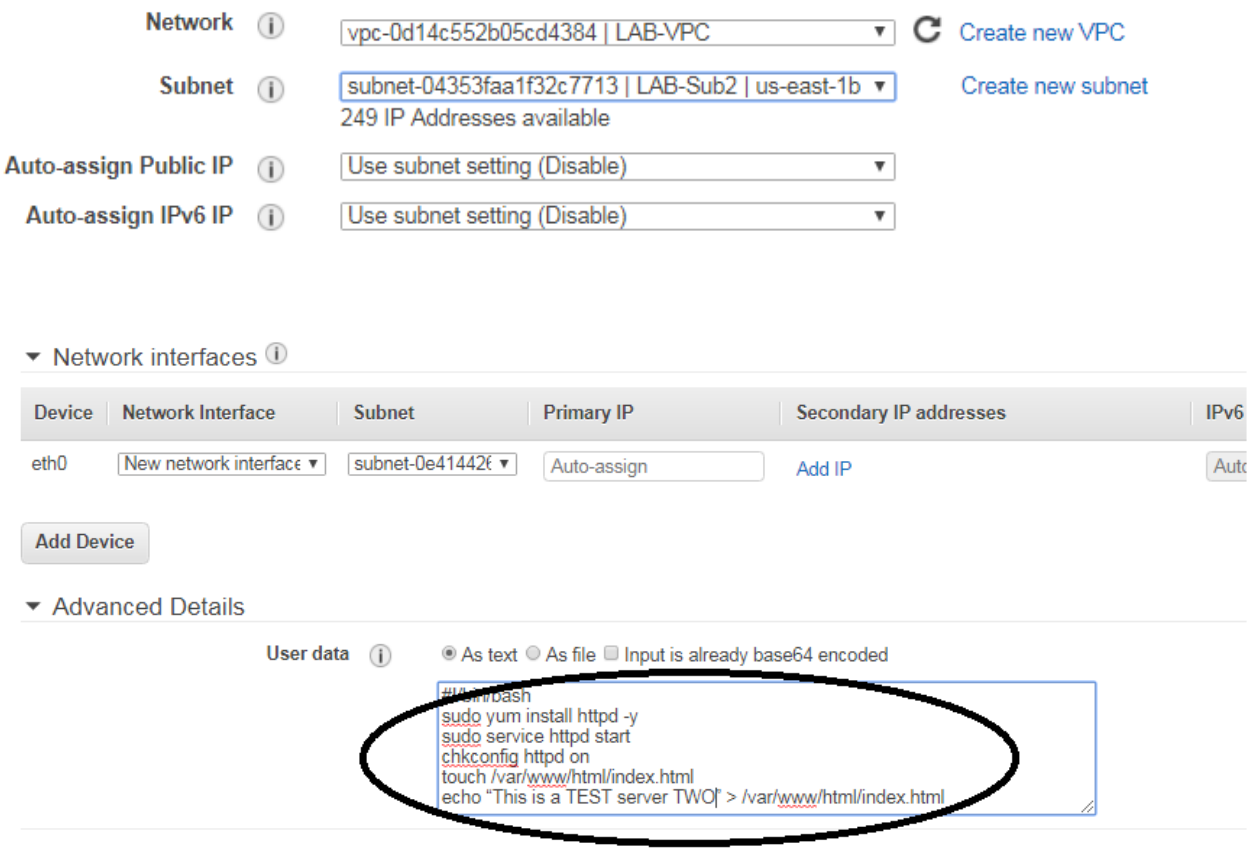

```
#!/bin/bash
sudo yum install httpd -y
sudo service httpd start
chkconfig httpd on
touch /var/www/html/index.html
echo "This is a TEST server TWO" > /var/www/html/index.html
```

Output: -- You should be able to open the webpage and get the above message with the public ip of EC2 instance

3. Create an Load balancer with Target Group.
    a. Create an Load Balancer with "Internet Facing"
    b. Assign the External port number , eg: --port **90** for people to access your page.
    c. Assign the VPC for which this Loadbalancer would be used, in our case, the above created same VPC.
    d. Assign both the subnets to the Loadbalancer.
    e. Give a name to the Target Group
    f. Configure the Routing Target, this is to tell the Load Balancer what port in the backend should it be talking to the EC2 instance.
    g. Add and Register the TWO instance that has been created.

Output: -- Under the Loadbalancer that you have created, you would find "DNS" name.

Copy that name and paste it on the Webpage.

If you refresh the page multiple time, it should show both the pages from each EC2 instance alternatively.